Pro-Max 6 Lug Adaptor Kit

Haweka has your solution for balancing Sprinter Vans!!

HAWEKA 3 Arm Star Setup

(Setup uses only the 160 400 056 centering disc)

1. Mount the Centering Disc
2. Place the wheel on the balancer
3. Align the studs from the 3-arm star with the lug holes on the wheel & tighten the hub nut handle

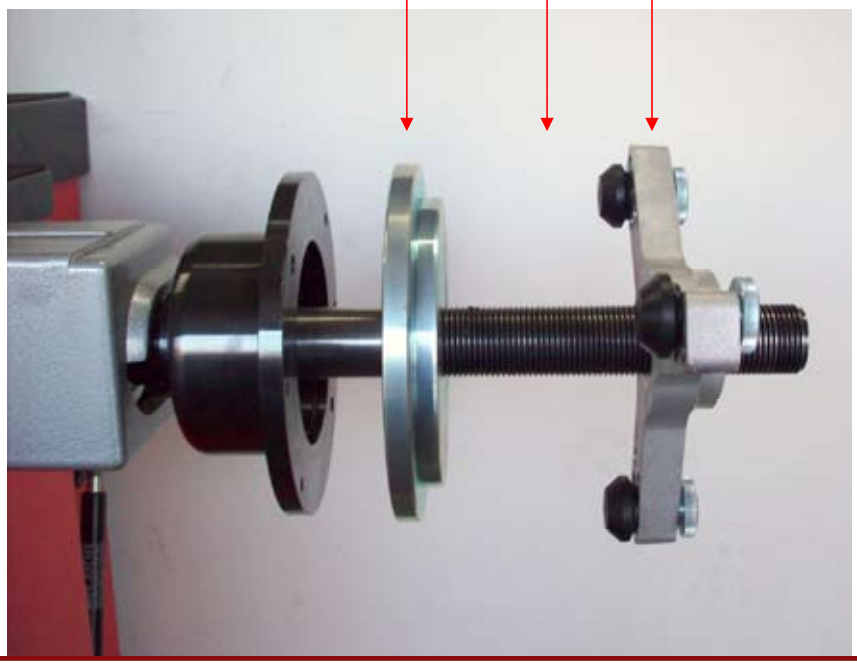

Balancing wheels for **Dodge/Freightliner Sprinter** vans and **Isuzu NPR/NQR's** is a serious problem for service techs. The cones commonly used to mount dually wheels on a balancer are difficult to center. This causes the wheel balancer to give error messages and give poor results.

Haweka has the solution for these problematic wheels, the **Pro-Max 6** adapter kit. **The Pro-Max 6** comes with a centering collet the same size as the wheel hub assuring proper fit. The three-arm mounting star provides equal clamping pressure to the wheel mimicking the lug nuts. **The Pro-Max 6** adapter kit is one of many innovative products from Haweka that meet today's challenging tire service needs.

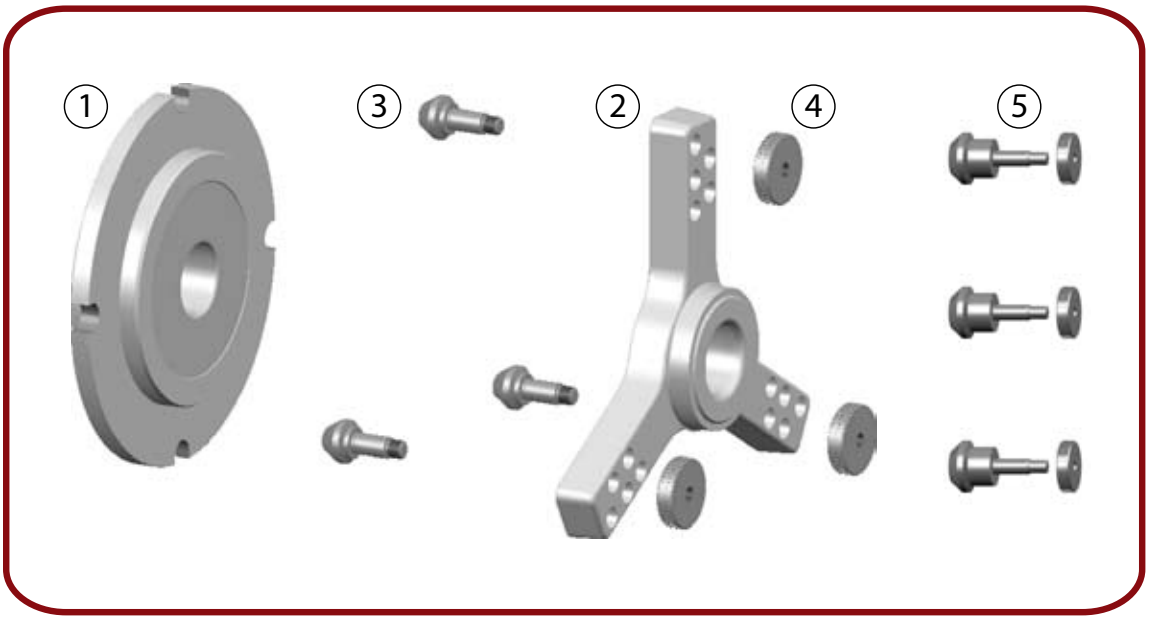

Kit includes:

1) Centering Disc 161/164mm
2) 3-Arm Clamp Star for 6-Lug Wheels
3) Centering Bolt with Nut for Dodge Sprinter
4) Knurled Nut M10 (6 Pieces Included with Studs)
5) Centering Bolt with Nut for Isuzu NPR

Bolt Patterns: 6 x 8.07" (205mm) and 6 x 8.75" (222.25mm)